TEAR SHEET

Circon 7" Rechargeable Accent Lamp

Item # WF 3100BZ-CC



Designer: Waterford

Height: 6.5"
Width: 5"
Base: 3.5" Round
Finishes: BZ, NB, PN
Glass Options: CC
Lightsource: Rechargeable LED w/ Touch Dimmer at Back of Base
Wattage: 1.5w (100 - 300lm)
Weight: 4 Pounds
Note: Battery Operated | Charging Cable Included

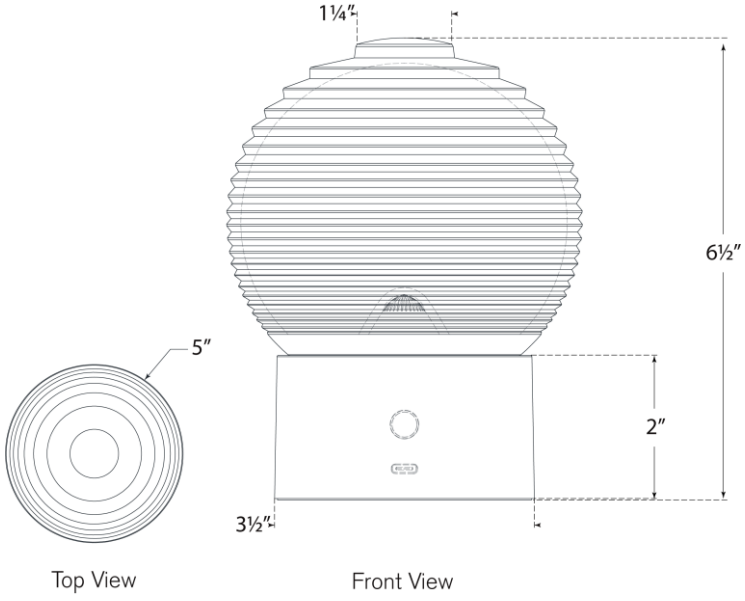

Top View

Front View

VISUAL COMFORT & CO.

DAMP LED