TEAR SHEET

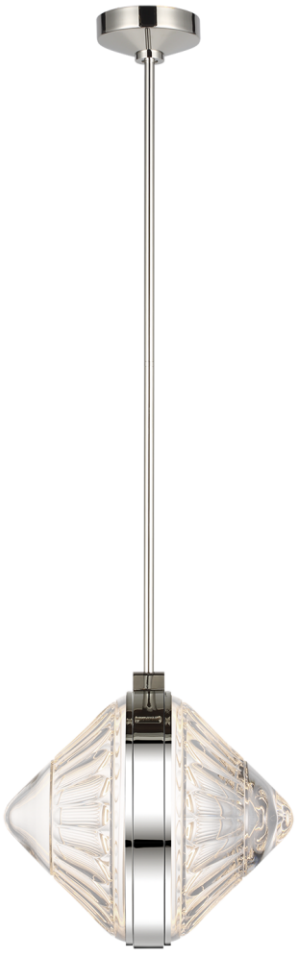

Copper Coast 15" Olive Cut Pendant

Item # WF 5007PN-CC

Designer: Waterford

O/A Height: 56.25"
Fixture Height: 14"
Min. Custom Height: 21.25"
Width: 15"
Canopy: 5.5" Round
Finishes: BZ, NB, PN
Glass Options: CC
Lightsource: Dedicated LED
Wattage: 15w (1800lm)
Weight: 25 Pounds
Note: Custom Height Available

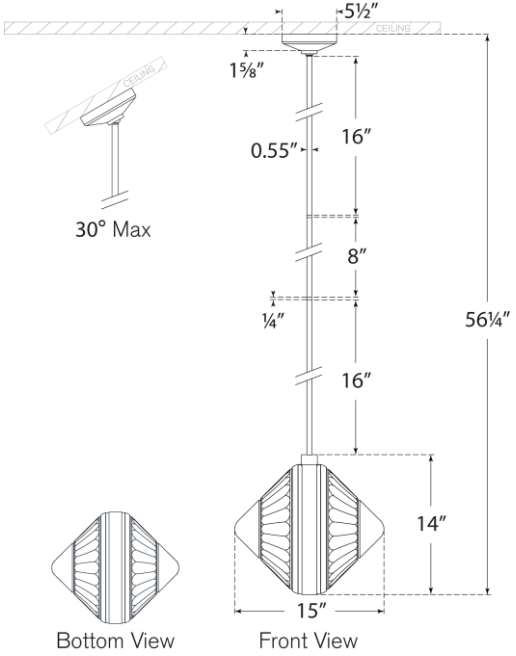

VISUAL COMFORT & CO.

DAMP LED 4